Read the Readme file first

Video: https://www.youtube.com/shorts/R_IQ59tipuM

Assemble 9v battery pack. The EMG board uses a positive and negative reference voltage. The easiest way I have found to achieve this is to wire two 9v Batteries in series. The positive terminal on battery A becomes the positive voltage, the negative terminal on battery B becomes the negative voltage, and the jumper between them becomes ground.

First print out the battery enclosure and lid. This is optional but makes the project much cleaner. With proper orientation you should not need support.

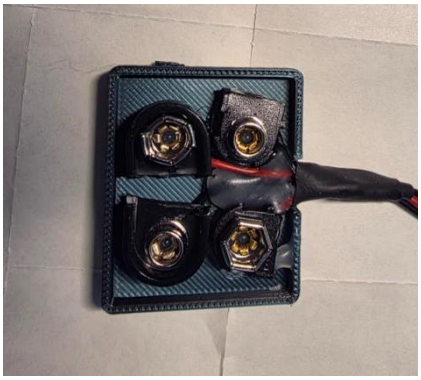

Next cut the two 9v battery clips in half and glue them to the underside of the lid as shown. I used hot glue, but I'm sure CA glue would work just fine. Reference the picture above.

Now splice the two center wires into a single jumper wire, and splice jumper wires onto the two remaining wires. I chose black for the two center wires and red and yellow for the remaining wires so I can easily remember which wire has which voltage value. Red = positive yellow = negative black = ground.

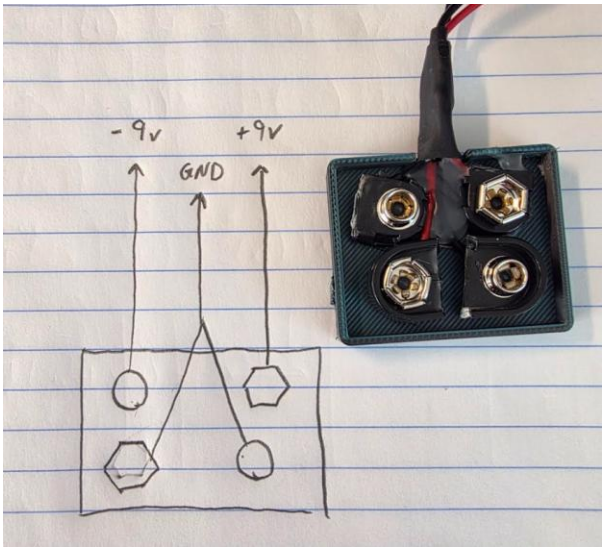

Now simply connect the batteries and slide them into the enclosure.

Wire up the remaining components. Note that for the directions I am not including servos. Refer to ReadMe for pinout information.

Using Arduino IDE install the provided code on the Arduino uno. Note that the threshold values vary from person to person. You will need to adjust them on a per user basis. Simply change them and observe the LED behavior. You should have a clean on/off behavior per flex.

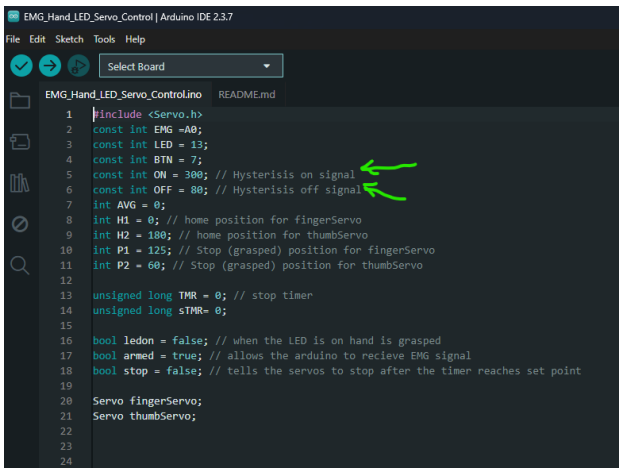

Place electrodes on forearm. One should be a few inches below the wrist, another should be a few inches above the inside elbow, and one should be on the bony part of the outer elbow. Note that locations are a general guideline. The electrodes can be moved to locations that improve individual results.

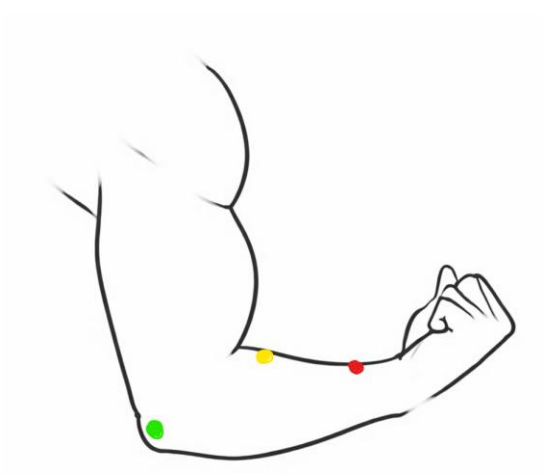

Power up the Arduino. One flex should turn the LED on. After relaxing the next flex should turn it off.